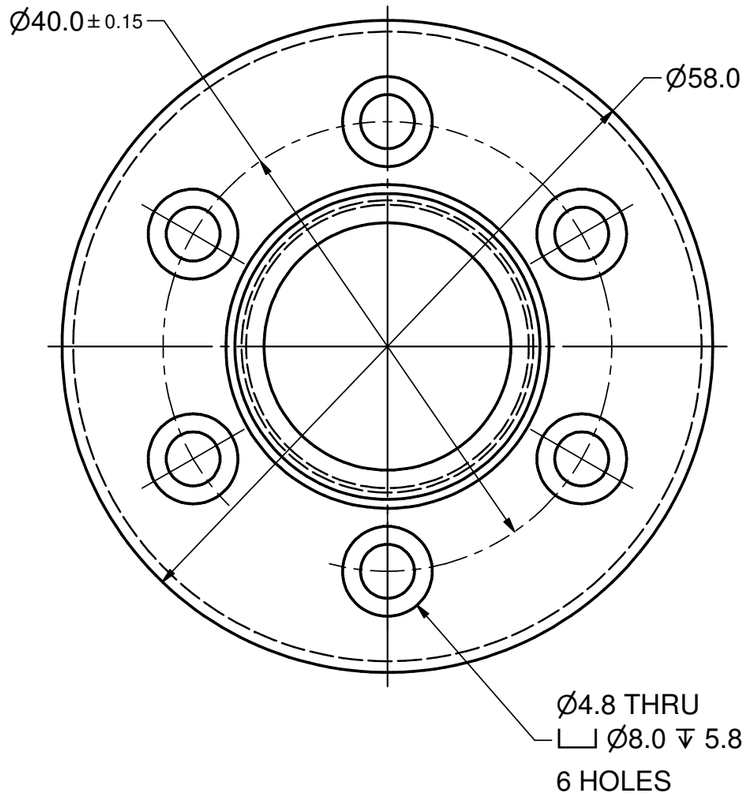

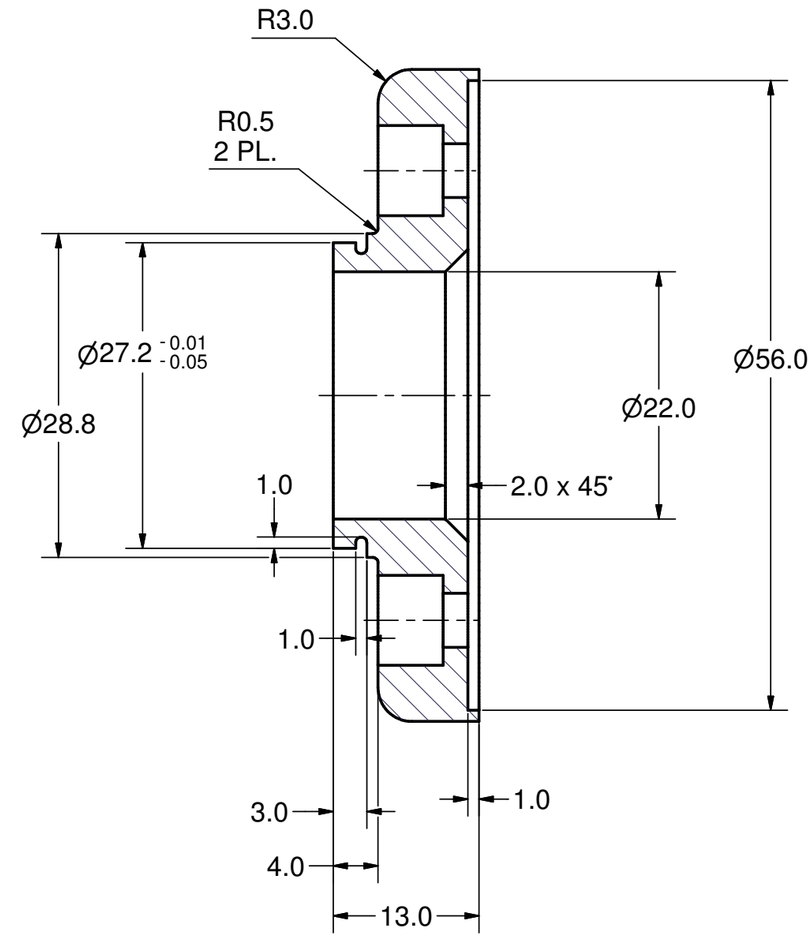

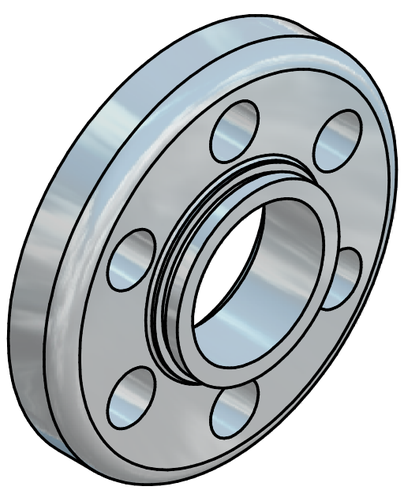

(1.5 : 1)

Issued all design changes as Rev C (TIO) - 4/19/07 - SAB

						Rev. C
					Scale : 2 :1	mat: Stainless Steel, 316L
					ASSEMBLY : *75 kW CW Input Coupler*	
				Date	Name	DESIGNATION :
			Drawn	10/5/04	Churanov	INNER FLANGE
			Checked	01-05-07	VM	
			Standard			
						100.131.007 — 1 — A3
State	Changes	Date	Name			